NRB INDUSTRIAL

CAM FOLLOWERS
STUD TYPE

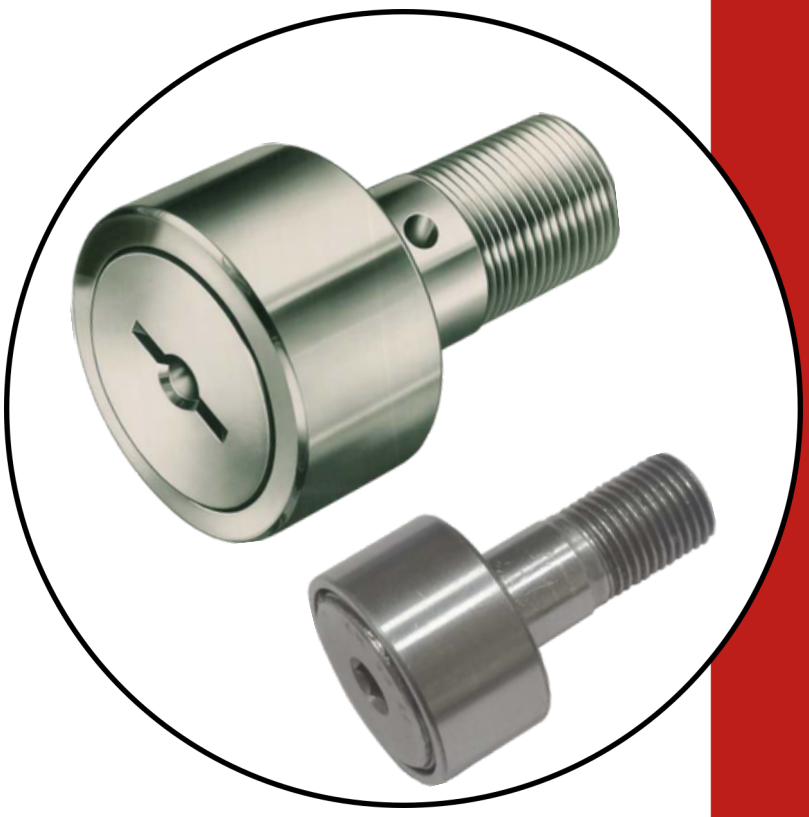

MOVING THE WHEELS OF INDUSTRY

CAM FOLLOWERS – STUD TYPE

Cam followers are designed to run directly on surfaces such as cams, ramps, and slide ways. They are used as track rollers, cam followers, and in a wide range of linear motion systems.

In order to meet the operating conditions of heavy radial loads usually accompanied by repeated shocks, NIBL cam followers have the following advantages:

- Heavy section outer ring of high strength steel hardened to 58 – 62 HRC
- No oil hole or lubrication groove on the outer ring, thus preventing the
  - introduction of impurities into the bearing
  - scaling and galling of the bearing track
- Convex (crowned) outer ring tolerating out-of-parallelism of contact surfaces.

Crowned outer rings are used where the axis of the cam follower is not parallel to the surface of the track or is skewed relative to the direction of travel. Outer ring with crowned outside surface supports high radial loads and reduces edge stresses which occur due to misalignment. Crowned outer rings are best suited in applications with curved or circular tracks.

NIBL offers cam followers with crowned outer ring as a standard feature. Cam followers with cylindrical outer ring are also available, suffix X.

For use of cam followers with crowned outer ring as bearings, please consult NIBL Technical Department.

- Oil hole provided under the needles enable lubricant replenishment through the shaft.
- Cam followers with full complement of needles offer the maximum dynamic and static load carrying capability, and anti-friction performance, in a compact design.
- Cage-guided cam followers provide large space for grease, helpful in applications where re-lubrication is infrequent. Permit operation at high speed.

Sealed type cam followers require low maintenance. Their operating temperature is limited due to the grease and seal material which is between -30° C and +100° C.

NIBL stud type cam followers consist of a solid stud of high tensile strength with an integral rib on one side, thick-walled outer ring, rolling elements set and a thrust washer pressed on to the other side of the stud. Assembly of these components forms an integral unit. Area which serves as the race way for the rolling elements and the abutment surfaces are hardened.

CAM FOLLOWERS – STUD TYPE

Axial guidance to the outer ring is by means of integral rib on the stud and a thrust washer which is press fitted on to the stud.

For re-lubrication lubrication holes are provided at the ribbed face of the stud as well as at the threaded end. In case of symbols 16 and 19 lubrication hole is at the ribbed face only. Additional lubrication holes are provided in the stud for cam followers with an outside diameter of 30 mm and above.

Threads on the end of the stud, hexagonal socket in the ribbed face and threads side of the stud are provided for ease of mounting. In case of symbols 16 and 19 threads on the end of the stud and a screw driver slot is provided in the ribbed face.

Design variations, different design variations of stud type cam followers are available:

KR .. type
- cage guided needle rollers
- with axial guidance
- with gap seals

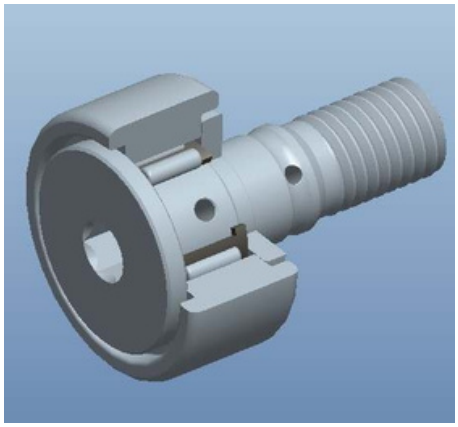

KR .. EE types
- cage guided needle rollers
- with axial guidance
- sealed both sides

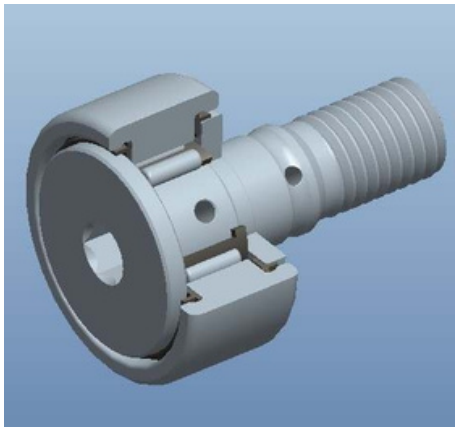

KRV .. type
- full complement set of needle rollers
- with axial guidance
- with gap seals

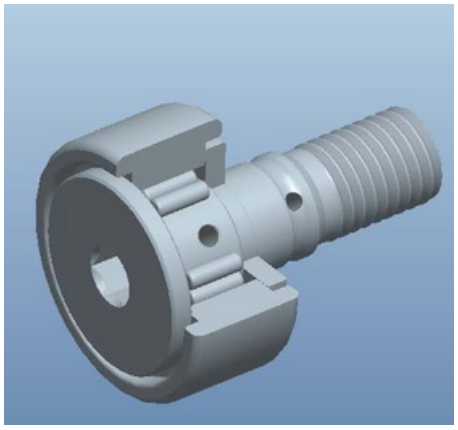

CAM FOLLOWERS – STUD TYPE

KRV .. EE type

- full complement set of needles
- with axial guidance
- sealed both sides

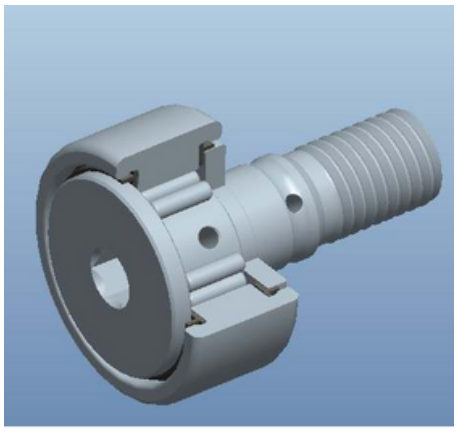

KRE .. EE type

- with eccentric collar
  (**Eccentric Cam Followers**) **#**
- cage guided needle rollers
- with axial guidance
- sealed both sides

 # Stud type of cam follower with eccentric collar can be supplied in any of the above design variation. Add 'E' to the pre-fix, example KRE.., KRE..EE, KRVE.., KRVE..EE

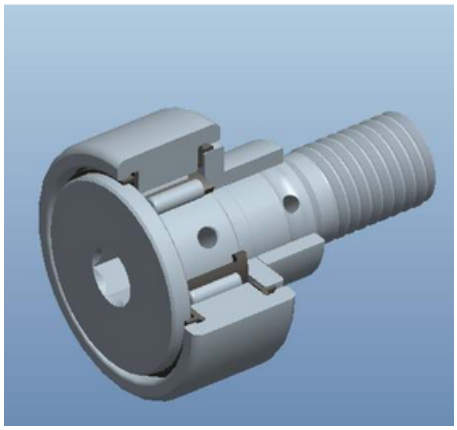

Eccentric Cam Followers are used when there is a need to make height adjustments between the cam follower and the track. This can be done by simply turning the entire cam follower inside the housing by using one of the hexagonal sockets provided on the side faces of the stud. It is possible to adjust the distance between the cam follower and the track by twice the eccentricity (for value of eccentricity, please-refer to the 'Dimensions table').

Benefits of eccentric cam followers,

- Improved load distribution when using more eccentric type stud cam followers.
- Preloaded linear systems possible.
- Manufacturing tolerances of mating component can be relaxed

The highest point of the eccentricity is indicated on the stud side face. Highest point of eccentricity is also the indicator of the location of the re-lubrication radial holes which should not lie in the load zone of the rolling contact.

Note
Cam followers with crowned outer ring is standard feature of NIBL cam followers. Above design variations of NIBL cam followers can also be supplied with cylindrical outer ring, add suffix 'X' to designation, example, KRV 26 EEX

Stud type cam followers, KR .. & KR .. EE types

- cage guided needle rollers
- with axial gudance
- with gap seales, KR ..
- sealed both sides, KR .. EE

Dimensions table - dimensions in mm

Outside diameter	Designation	Weight approx.	Dimensions										
			D	d_1 h7	B	B_1 max	B_2	B_3	C	C_1	r min.	d_2	d_3
mm		gms	mm										
16	KR 16 *	19	16	6	28	12.2	16	-	11	0.6	0.15	12.5	-
	KR 16 EE *	18	16	6	28	12.2	16	-	11	0.6	0.15	12.5	-
19	KR 19 *	29	19	8	32	12.2	20	-	11	0.6	0.15	15	-
	KR 19 EE *	29	19	8	32	12.2	20	-	11	0.6	0.15	15	-
22	KR 22	45	22	10	36	13.2	23	-	12	0.6	0.3	17.5	-
	KR 22 EE	43	22	10	36	13.2	23	-	12	0.6	0.3	17.5	-
26	KR 26	59	26	10	36	13.2	23	-	12	0.6	0.3	17.5	-
	KR 26 EE	57	26	10	36	13.2	23	-	12	0.6	0.3	17.5	-
30	KR 30	92	30	12	40	15.2	25	6	14	0.6	0.6	23	3
	KR 30 EE	88	30	12	40	15.2	25	6	14	0.6	0.6	23	3
32	KR 32	103	32	12	40	15.2	25	6	14	0.6	0.6	23	3
	KR 32 EE	98	32	12	40	15.2	25	6	14	0.6	0.6	23	3
35	KR 35	173	35	16	52	19.6	32.5	8	18	0.8	0.6	27.6	3
	KR 35 EE	164	35	16	52	19.6	32.5	8	18	0.8	0.6	27.6	3
40	KR 40	247	40	18	58	21.6	36.5	8	20	0.8	1	31.5	3
	KR 40 EE	239	40	18	58	21.6	36.5	8	20	0.8	1	31.5	3
47	KR 47	386	47	20	66	25.6	40.5	9	24	0.8	1	36.5	4
	KR 47 EE	381	47	20	66	25.6	40.5	9	24	0.8	1	36.5	4
52	KR 52	461	52	20	66	25.6	40.5	9	24	0.8	1	36.5	4
	KR 52 EE	454	52	20	66	25.6	40.5	9	24	0.8	1	36.5	4
62	KR 62	790	62	24	80	30.6	49.5	11	29	0.8	1	44	4
	KR 62 EE	770	62	24	80	30.6	49.5	11	29	0.8	1	44	4
72	KR 72	1 040	72	24	80	30.6	49.5	11	29	0.8	1.1	44	4
	KR 72 EE	1 010	72	24	80	30.6	49.5	11	29	0.8	1.1	44	4
80	KR 80	1 608	80	30	100	37	63	15	35	1	1.1	53	4
	KR 80 EE	1 608	80	30	100	37	63	15	35	1	1.1	53	4
90	KR 90	1 975	90	30	100	37	63	15	35	1	1.1	53	4
	KR 90 EE	1 975	90	30	100	37	63	15	35	1	1.1	53	4

(1) W, Nominal dimension for hexagonal socket

(2) When a cam follower moves on a flat raceway or on a cam plate, the load distribution on rolling elements changes due to the elastic deformation of the outer ring. For such operating conditions, the effective load ratings C_{rw} and C_{orw} should be used.

(3) speed limit given is with grease lubrication.

* Symbols 16 & 19 are supplied with screw driver slot as standard feature, however these can also be supplied with hexagonal socket if required.

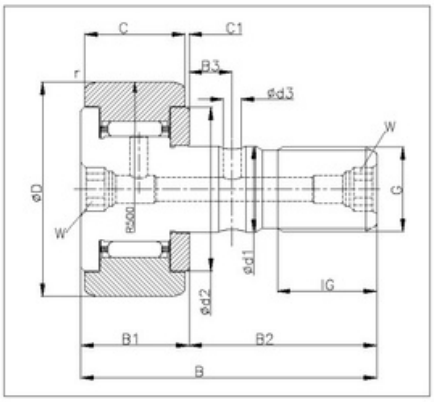

KR .. type

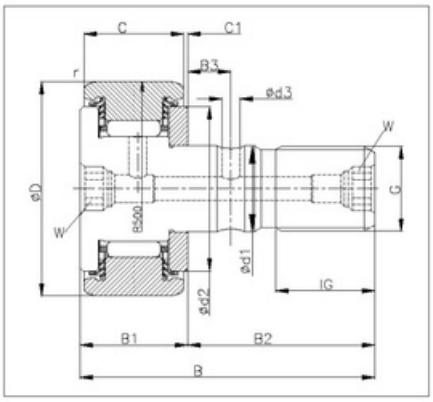

KR .. EE type

G	IG	(1) W	Nut tightening torque M_A	(2) Basic capacities Dynamic C_{rw}	Static $C_{or\,w}$	Fatigue limit load Cur w	(3) Speed limit
mm			Nm	N	N	N	r.p.m.
M6X1	8	-	3	3 150	3 350	450	14 000
M6X1	8	-	3	3 150	3 350	450	14 000
M8X1.25	10	-	8	3 500	4 000	540	11 000
M8X1.25	10	-	8	3 500	4 000	540	11 000
M10X1	12	5	15	4 550	5 300	730	8 000
M10X1	12	5	15	4 550	5 300	730	8 000
M10X1	12	5	15	5 100	6 400	840	8 000
M10X1	12	5	15	5 100	6 400	840	8 000
M12X1.5	13	6	22	6 800	8 600	1 220	5 500
M12X1.5	13	6	22	6 800	8 600	1 220	5 500
M12X1.5	13	6	22	7 100	9 200	1 290	5 500
M12X1.5	13	6	22	7 100	9 200	1 290	5 500
M16X1.5	17	8	58	9 700	14 300	1 830	3 600
M16X1.5	17	8	58	9 700	14 300	1 830	3 600
M18X1.5	19	8	87	10 900	15 800	2 090	2 900
M18X1.5	19	8	87	10 900	15 800	2 090	2 900
M20X1.5	21	10	120	15 400	26 000	3 400	2 400
M20X1.5	21	10	120	15 400	26 000	3 400	2 400
M20X1.5	21	10	120	16 600	29 000	3 800	2 400
M20X1.5	21	10	120	16 600	29 000	3 800	2 400
M24X1.5	25	14	220	26 000	48 000	6 800	1 900
M24X1.5	25	14	220	26 000	48 000	6 800	1 900
M24X1.5	25	14	220	28 000	53 000	7 200	1 900
M24X1.5	25	14	220	28 000	53 000	7 200	1 900
M30X1.5	32	14	450	38 500	77 000	11 000	1 300
M30X1.5	32	14	450	38 500	77 000	11 000	1 300
M30X1.5	32	14	450	40 500	83 000	11 700	1 300
M30X1.5	32	14	450	40 500	83 000	11 700	1 300

Stud type cam followers, KRV .. & KRV .. EE types

- full complement set of needles rollers
- with axial gudance
- with gap seales, KRV ..
- sealed both sides, KRV .. EE

Dimensions table - dimensions in mm

Outside diameter	Designation	Weight approx.	Dimensions										
			D	d_1 h7	B	B_1 max	B_2	B_3	C	C_1	r min.	d_2	d_3
mm		gms	mm										
16	KRV 16 *	19	16	6	28	12.2	16	-	11	0.6	0.15	12.5	-
	KRV 16 EE *	19	16	6	28	12.2	16	-	11	0.6	0.15	12.5	-
19	KRV 19 *	31	19	8	32	12.2	20	-	11	0.6	0.15	15	-
	KRV 19 EE *	31	19	8	32	12.2	20	-	11	0.6	0.15	15	-
22	KRV 22	45	22	10	36	13.2	23	-	12	0.6	0.3	17.5	-
	KRV 22 EE	45	22	10	36	13.2	23	-	12	0.6	0.3	17.5	-
26	KRV 26	59	26	10	36	13.2	23	-	12	0.6	0.3	17.5	-
	KRV 26 EE	59	26	10	36	13.2	23	-	12	0.6	0.3	17.5	-
30	KRV 30	91	30	12	40	15.2	25	6	14	0.6	0.6	23	3
	KRV 30 EE	91	30	12	40	15.2	25	6	14	0.6	0.6	23	3
32	KRV 32	101	32	12	40	15.2	25	6	14	0.6	0.6	23	3
	KRV 32 EE	101	32	12	40	15.2	25	6	14	0.6	0.6	23	3
35	KRV 35	166	35	16	52	19.6	32.5	8	18	0.8	0.6	27.6	3
	KRV 35 EE	166	35	16	52	19.6	32.5	8	18	0.8	0.6	27.6	3
40	KRV 40	247	40	18	58	21.6	36.5	8	20	0.8	1	31.5	3
	KRV 40 EE	247	40	18	58	21.6	36.5	8	20	0.8	1	31.5	3
47	KRV 47	390	47	20	66	25.6	40.5	9	24	0.8	1	36.5	4
	KRV 47 EE	390	47	20	66	25.6	40.5	9	24	0.8	1	36.5	4
52	KRV 52	463	52	20	66	25.6	40.5	9	24	0.8	1	36.5	4
	KRV 52 EE	463	52	20	66	25.6	40.5	9	24	0.8	1	36.5	4
62	KRV 62	787	62	24	80	30.6	49.5	11	29	0.8	1	44	4
	KRV 62 EE	787	62	24	80	30.6	49.5	11	29	0.8	1	44	4
72	KRV 72	1 027	72	24	80	30.6	49.5	11	29	0.8	1.1	44	4
	KRV 72 EE	1 027	72	24	80	30.6	49.5	11	29	0.8	1.1	44	4
80	KRV 80	1 636	80	30	100	37	63	15	35	1	1.1	53	4
	KRV 80 EE	1 636	80	30	100	37	63	15	35	1	1.1	53	4
90	KRV 90	2 003	90	30	100	37	63	15	35	1	1.1	53	4
	KRV 90 EE	2 003	90	30	100	37	63	15	35	1	1.1	53	4

(1) W, Nominal dimension for hexagonal socket

(2) When a cam follower moves on a flat raceway or on a cam plate, the load distribution on rolling elements changes due to the elastic deformation of the outer ring. For such operating conditions, the effective load ratings C_{rw} and C_{orw} should be used.

(3) speed limit given is with grease lubrication.

* Symbols 16 & 19 are supplied with screw driver slot as standard feature, however these can also be supplied with hexagonal socket if required.

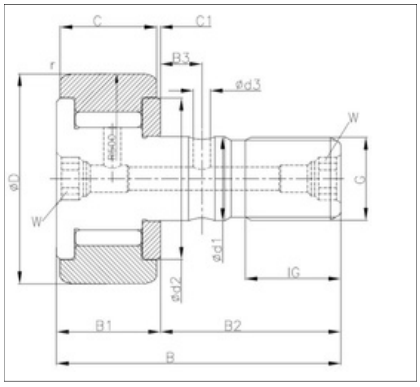

KRV .. type

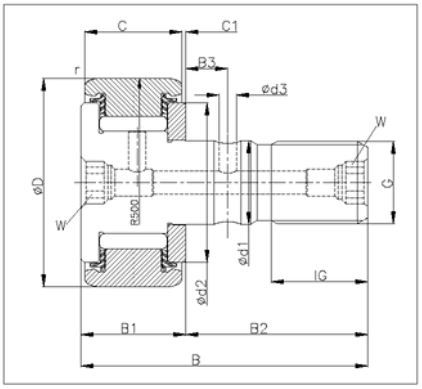

KRV .. EE type

G	IG	(1) W	Nut tightening torque M_A	(2) Basic capacities Dynamic C_{rw}	Static $C_{or\,w}$	Fatigue limit load $C_{ur\,w}$	(3) Speed limit
mm			Nm	N	N	N	r.p.m.
M6X1	8	-	3	4 900	6 600	950	3 800
M6X1	8	-	3	4 900	6 600	950	3 800
M8X1.25	10	-	8	5 400	8 000	1 170	3 100
M8X1.25	10	-	8	5 400	8 000	1 170	3 100
M10X1	12	5	15	6 200	9 200	1 210	2 600
M10X1	12	5	15	6 200	9 200	1 210	2 600
M10X1	12	5	15	7 300	11 500	1 500	2 600
M10X1	12	5	15	7 300	11 500	1 500	2 600
M12X1.5	13	6	22	9 500	14 900	2 050	2 100
M12X1.5	13	6	22	9 500	14 900	2 050	2 100
M12X1.5	13	6	22	10 000	16 100	2 200	2 100
M12X1.5	13	6	22	10 000	16 100	2 200	2 100
M16X1.5	17	8	58	12 600	23 100	3 200	1 600
M16X1.5	17	8	58	12 600	23 100	3 200	1 600
M18X1.5	19	8	87	14 700	26 500	3 500	1 400
M18X1.5	19	8	87	14 700	26 500	3 500	1 400
M20X1.5	21	10	120	20 300	42 000	5 900	1 300
M20X1.5	21	10	120	20 300	42 000	5 900	1 300
M20X1.5	21	10	120	22 300	48 000	6 700	1 300
M20X1.5	21	10	120	22 300	48 000	6 700	1 300
M24X1.5	25	14	220	33 500	75 000	11 200	1 100
M24X1.5	25	14	220	33 500	75 000	11 200	1 100
M24X1.5	25	14	220	36 500	85 000	12 600	1 100
M24X1.5	25	14	220	36 500	85 000	12 600	1 100
M30X1.5	32	14	450	48 500	117 000	17 400	850
M30X1.5	32	14	450	48 500	117 000	17 400	850
M30X1.5	32	14	450	52 000	129 000	19 000	850
M30X1.5	32	14	450	52 000	129 000	19 000	850

Stud type cam followers, KRE .. EE types

- † with eccentric collar #
- cage guided needle rollers
- with axial gudance
- sealed both sides, KRE..EE

Dimensions table - dimensions in mm

Outside diameter	Designation	Weight approx.	Dimensions										
			D	d_1 h7	B	B_1 max	B_2	B_3	C	C_1	r min.	d_2	d_3
mm		gms	mm										
16	KRE 16 EE *	20	16	6	28	12.2	16	-	11	0.6	0.15	12.5	-
19	KRE 19 EE	32	19	8	32	12.2	20	-	11	0.6	0.15	15	-
22	KRE 22 EE *	47	22	10	36	13.2	23	-	12	0.6	0.30	17.5	-
26	KRE 26 EE	62	26	10	36	13.2	23	-	12	0.6	0.30	17.5	-
30	KRE 30 EE	93	30	12	40	15.2	25	6	14	0.6	0.60	23.0	3
32	KRE 32 EE	104	32	12	40	15.2	25	6	14	0.6	0.60	23.0	3
35	KRE 35 EE	177	35	16	52	19.6	32.5	8	18	0.8	0.60	27.6	3
40	KRE 40 EE	255	40	18	58	21.6	36.5	8	20	0.8	1	31.5	3
47	KRE 47 EE	400	47	20	66	25.6	40.5	9	24	0.8	1	36.5	4
52	KRE 52 EE	473	52	20	66	25.6	40.5	9	24	0.8	1	36.5	4
62	KRE 62 EE	798	62	24	80	30.6	49.5	11	29	0.8	1	44	4
72	KRE 72 EE	1 038	72	24	80	30.6	49.5	11	29	0.8	1.1	44	4
80	KRE 80 EE	1 665	80	30	100	37	63	15	35	1	1.1	53	4
90	KRE 90 EE	2 032	90	30	100	37	63	15	35	1	1.1	53	4

cam followers in other design variations (KR ..; KR .. EE; KRV ..; KRV .. EE) can also be supplied with Eccentric Collar, suffix E : KRE ..; KRE .. EE; KRVE ..; KRVE .. EE

(1) W, Nominal dimension for hexagonal socket

(2) When a cam follower moves on a flat raceway or on a cam plate, the load distribution on rolling elements changes due to the elastic deformation of the outer ring. For such operating conditions, the effective load ratings C_{rw} and C_{orw} should be used.

(3) speed limit given is with grease lubrication.

* Symbols 16 & 19 are supplied with screw driver slot as standard feature, however these can also be supplied with hexagonal socket if required.

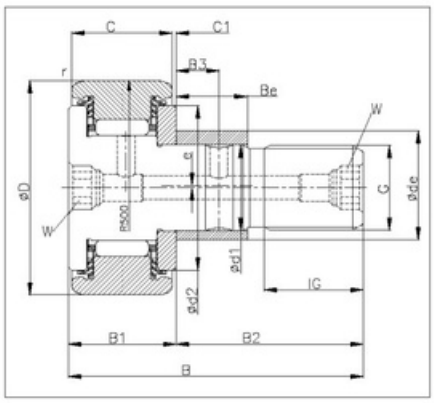

KRV ..EE type

			Eccentric			Nut tightening torque M_A	(2) Basic capacities		Fatigue limit load $C_{ur\,w}$	(3) Speed limit
G	IG	(1) W	d_e h9	B_e	e		Dynamic C_{rw}	Static $C_{or\,w}$		
mm						Nm	N	N	N	r.p.m.
M6X1	8	-	9	7	0.5	3	3 150	3 350	450	14 000
M8X1.25	10	-	11	9	0.5	8	3 500	4 000	540	11 000
M10X1	12	5	13	10	0.5	15	4 550	5 300	730	8 000
M10X1	12	5	13	10	0.5	15	5 100	6 400	840	8 000
M12X1.5	13	6	15	11	0.5	22	6 800	8 600	1 220	5 500
M12X1.5	13	6	15	11	0.5	22	7 100	9 200	1 290	5 500
M16X1.5	17	8	20	14	1	58	9 700	14 300	1 830	3 600
M18X1.5	19	8	22	16	1	87	10 900	15 800	2 090	2 900
M20X1.5	21	10	24	18	1	120	15 400	26 000	3 400	2 400
M20X1.5	21	10	24	18	1	120	16 600	29 000	3 800	2 400
M24X1.5	25	14	28	22	1	220	26 000	48 000	6 800	1 900
M24X1.5	25	14	28	22	1	220	28 000	53 000	7 200	1 900
M30X1.5	32	14	35	29	1.5	450	38 500	77 000	11 000	1 300
M30X1.5	32	14	35	29	1.5	450	40 500	83 000	11 700	1 300

N R B I N D U S T R I A L B E A R I N G S L T D .

REGD. OFFICE : NRB Industrial Bearing Ltd, 3rd Floor, Metro Talkies, Mahatma Gandhi Road, Dhobi Talao, New Marine Lines, Junction, Mumbai, Maharashtra 400020

PLOT NO. B -18, FIVE STAR M.I.D.C AREA, SHENDRA, AURANGABAD - 431201
TEL: 0240 - 2622180
www: nrbindustrialbearings.com